PROFINET I/O Module

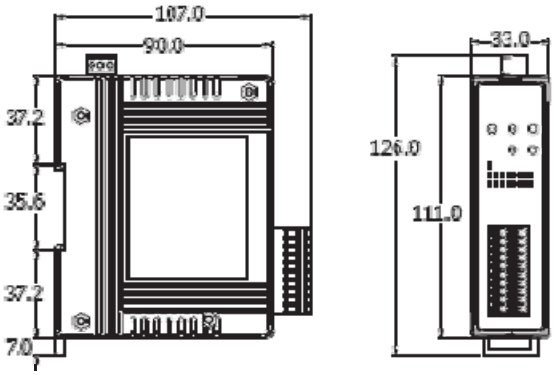

PFN-2052

The PFN-2052 is one of the PROFINET IO series products produced by ICP DAS. It provides the PROFINET IO communication protocol with any PROFINET IO controllers. It has 8-channel isolated digital inputs, and it provides ±4kV ESD protection contacting for all terminals. You can access and configure it by using the GSDML file in any PROFINET Engineering tool.

Features

- Protocol: PROFINET IO Device
- PROFINET Conformance Class B and RT Class 1
- Cyclic Time: 1ms (min)
- Generic GSDML File Provided (Version 2.25)
- DI ON/OFF voltage level: +4 ~ +30 VDC / +1V max.
- 4 kV Contact ESD protection for any terminal
- Wide range of power input (+10 ~ +30 VDC) and operating temperature (-25 ~ +75 ˚C)

Internal I/O Structure

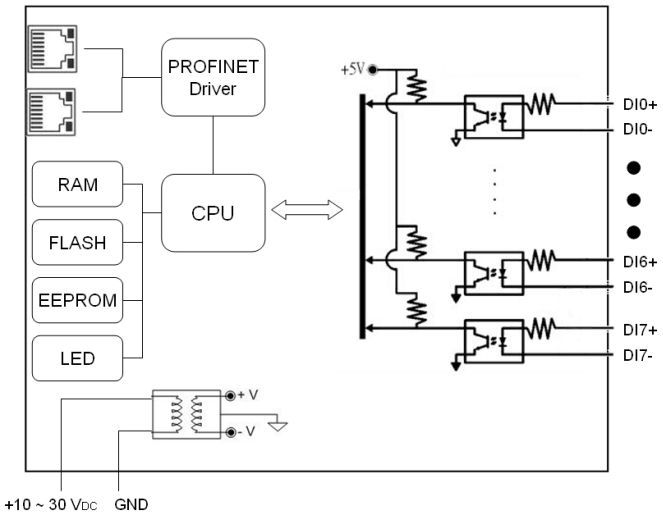

I/O Pin & Wire Connection

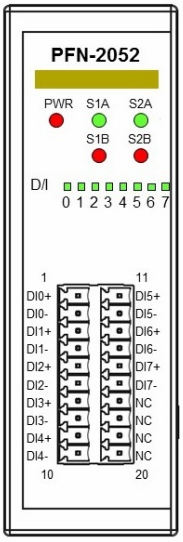

Terminal No.	Pin Assignment	Terminal No.	Pin Assignment
01	DI0+	11	DI5+
02	DI0-	12	DI5-
03	DI1+	13	DI6+
04	DI1-	14	DI6-
05	DI2+	15	DI7+
06	DI2-	16	DI7-
07	DI3+	17	NC
08	DI3-	18	NC
09	DI4+	19	NC
10	DI4-	20	NC

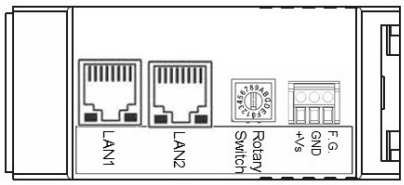

Wire Connection

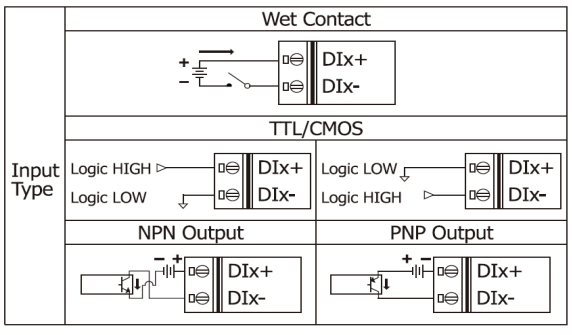

Spectra GmbH & Co. KG
vertrieb@spectra.de
Niederlassung Österreich
info@spectra-austria.at
Spectra (Schweiz) AG
info@spectra.ch

Hardware	
CPU	32-bit CPU Core
RAM/Flash/EEPROM	32 MB / 4 MB / 8 KB
Watchdog	CPU built-in
ESD Protection	4 kV class A
PROFINET Interface	
Protocol	PROFINET IO Device
Conformance Classes	Class B
Services	RTC, RTA, CL-RPC, DCP, LLDP, I&M
Cycle Time	1 ms (min)
Ethernet Interface	
Controller	10/100Base-TX Ethernet Controller (Auto-negotiating, Auto_MDIX)
Connector	RJ-45 x 2 (LED indicators) , Integrated 2-Port Switch
Services	ICMP, IGMP, ARP, DHCP, TELNET, TFTP, SNMP, VLAN Priority Tagging
Digital Input	
Channels	8, Wet Contact: Sink or Source
Wet Contact Level	Off Voltage Level : +1 VDC max., On Voltage Level : +4 VDC to +30 VDC
LED	
Round LED	PWR LED, S1A LED, S1B LED, S2A LED, S2B LED
Power	
Power supply	Unregulated +10 ~ +30 VDC
Protection	Power reverse polarity protection, Over-voltage brown-out protection
Power Consumption	3.5 W
Mechanism	
Installation	DIN-Rail
Dimensions	33 mm x 107 mm x 126 mm (W x L x H)
Environment	
Operating Temp.	-25 ~ 75 ℃
Storage Temp.	-30 ~ 80 ℃
Humidity	10 ~ 90% RH, non-condensing

Applications

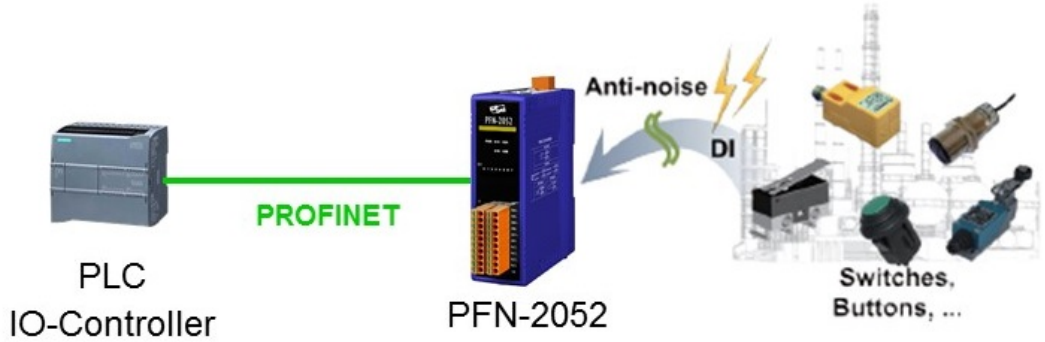

Ordering Information

PFN-2052 CR	PROFINET I/O Module (Isolated 8-ch DI) (RoHS) **Art. No. 141422**