µPAC-7186EX / EXD

Faster Ethernet µPAC

Main Features

- 80186 (80MHz) CPU, 512K Flash, 512K SRAM
- Ethernet 10/100M Base-TX, RS-232 / RS-485
- OS: MiniOS7
- Support I/O expansion bus
- Remote maintenance via the Ethernet
- Modbus protocol to SCADA
  Indusoft, DasyLab, Trace Mode, Citect, iFix...
- Easy use software development toolkits :
  MiniOS7 Studio, Xserver, VxComm, Modbus Libs.

Comparison

New Advantages	µPAC-7186EX	I-7188EX
Faster normal running speed	2~4 times	1
More powerful CPU	80186-80MHz	80188-40MHz
Faster / powerful Ethernet	10/100 Base-TX	10 Base-T
More EEPROM	16K	2K

Features

- **High reliability in harsh environment**
- **Embedded MiniOS7, anti-virus**
- **Built-in watchdog timer (WDT)**
- **Ethernet Protocols: TCP, UDP, IP, ICMP, ARP**
- **Faster 10/100M Ethernet port**
- **Modbus Protocols**
- **Free easy-to-use software development toolkits for your applications**
- **Expansion Bus Interface**
- **Remote / web Configuration/Maintenance**
- **Support for Virtual COM technology**

Expansion Board Selection Guide

For:	X-Boards:						
DI/O, photo mos, PWM	X107	X109	X110	X111	X116	X119	
A/D, D/A, DI/O	X202	X203	X303	X304	X305	X308	X310
Prototype, Testing	X002	X004	X005	X006			
RS-232/485	X503	X504	X505	X506	X511		
RS-232/485/422, DI/O	X507	X508	X509	X510	X510-128		X518
Flash ROM	X600	X601					
Battery Backup SRAM	X607	X608					
Motion Control	X702	X703					

Wiring

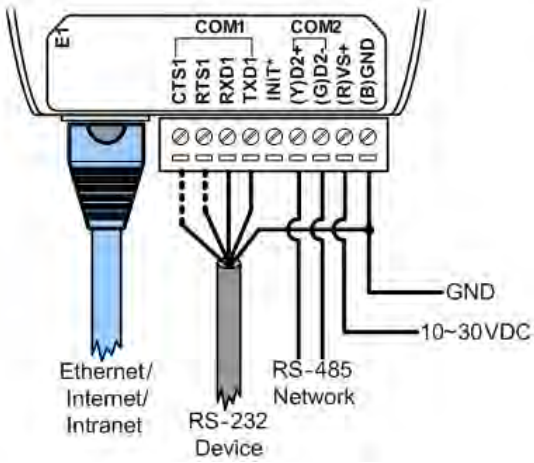

Pin Assignments

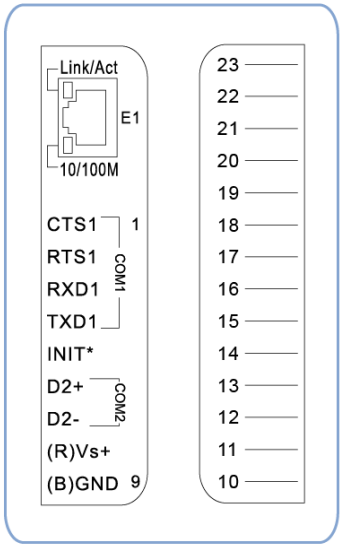

Specifications

Series : Palm-size PAC > µPAC-7186 > 86E > 86EX

PACs	µPAC-7186EX	µPAC-7186EXD
■ CPU Specification		
CPU	80186-80M Hz	
SRAM	512K Bytes	
Flash	512K Bytes	
NAND Flash	--	
FRAM	--	
EEPROM	16K Bytes	
NVRAM	31 Bytes	
OS	MiniOS7	
RTC	Yes	
64-bit hardware serial number	Yes	
Watchdog Timer	Yes	
■ Communication Interface		
Ethernet Port	10/100M Base-TX (Auto-negotiating, Auto_MDIX, LED indicator)	
COM1	RS-232 (TXD, RXD, RTS, CTS, GND), Non-isolation, Speed: 115200 bps max	
COM2	RS-485 (D2+, D2-, self-tuner ASIC inside); Non-isolation, Speed: 115200 bps max	
■ LED Display		
System LED	Yes, as power / communication Indicator	
5-digit 7-segment LED Display	No	Yes
■ Hardware Expansion		
I/O Expansion Bus	Yes	
User Defined I/O Pins	14 Pins	
■ Operating Environment		
Operating Temperature	-25° C to +75° C (-13° F to +167° F)	
Storage Temperature	-40° C to +80° C (-40° F to +176° F)	
Humidity	5% to 90%, non-condensing	
■ Power		
Protection	Power reverse polarity protection	
Frame Ground	Yes (for ESD Protection)	
Required Supply Voltage	+10 VDC to +30 VDC (non-regulated)	
Power Consumption	1.5 W	2.5 W
■ Green Status		
RoHS	RoHS Compliance 2002/95/EC	
WEEE	WEEE Compliance	
■ Dimensions	123 x 72 x 33 mm	

PAC Views

Unit: mm

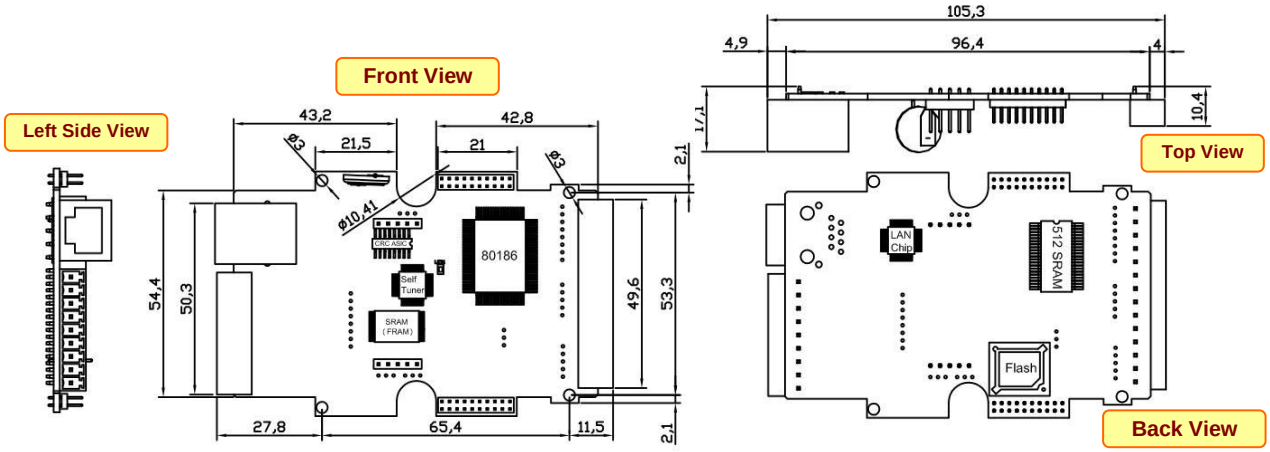

Ordering Information

	Model Number	Description * All orders include download utility, download cable and manual.
Art. No. 118137	µPAC-7186EX CR	10/100M Ethernet µPAC, 80186-80 CPU, 512K SRAM, 512K Flash (RoHS)
Art. No. 118057	µPAC-7186EXD CR	10/100M Ethernet µPAC, 80186-80 CPU, 512K SRAM, 512K Flash, LED display (RoHS)
	Optional Accessories	
	PWR-24/110	Wall-plug power adaptor /110VAC, 60Hz, 3.6W
	GPSU06U-6	Wall-plug power Adapter / 100-240VAC, 50/60Hz, 6W
	PWR-24/230	Wall-plug power adaptor /220VAC, 50Hz, 3.6W
	Expansion Boards	More than 50 X-boards are available, please check out the Expansion I/O guide